A1

No.	REVISIONS	DATE	DRAWN	APP.
1				
2				

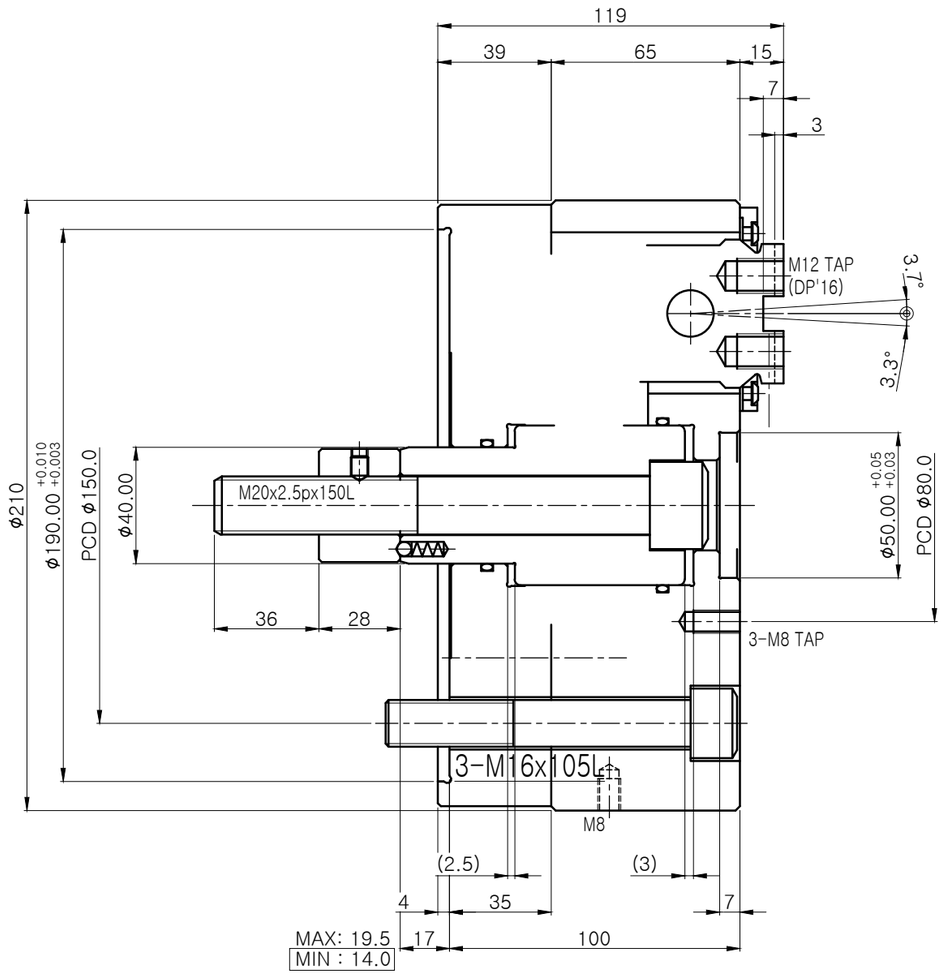

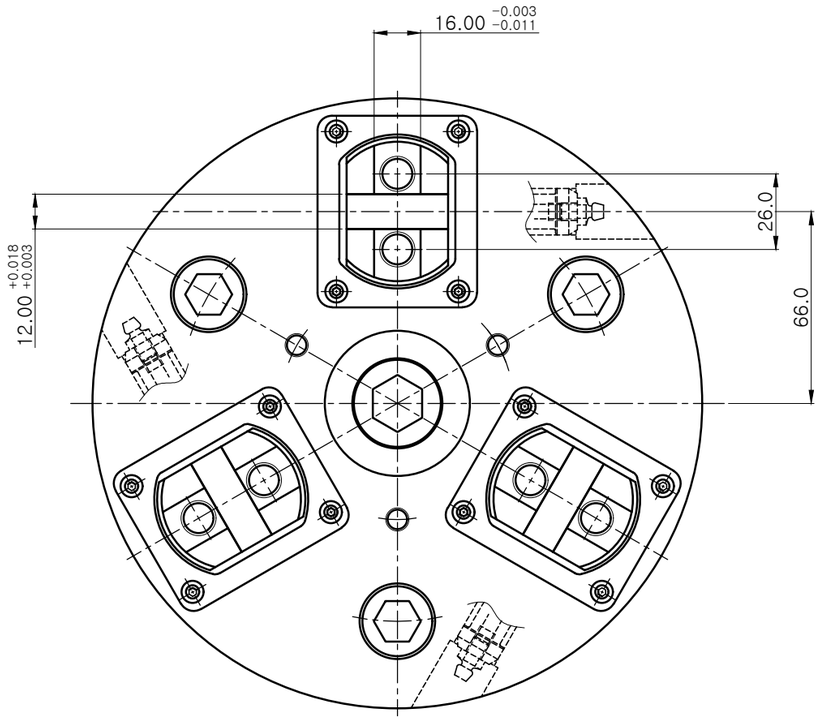

CHUCK SPEC.	
CHUCK SPEC.	.
PLUNGER STROKE	. mm
JAW STROKE	. mm
MAX. INPUT FORCE	. kgf
CLAMPING FORCE	. kgf
MAX. SPEED	. rpm
MOMENT OF INERTIAL	.kgf.m²
WEIGHT	. kg

1	BLANK CHUCK	STD.	LCC-08	1SET	-
NO.	TITLE OF ITEM	MATERIAL	SIZE & SPEC.	Q'TY	NOTE

TITLE	LCC CHUCK (LCC-08)	PART NAME	ASSEMBLY DRAWING
DWG. NO.	LCC-08-00	AGENCY	-
CODE NO.	-	USER	-
		DATE	2019. 02. 25.

SCALE 1 : 1	- Approved	- Checked	- Designed

SAMCHULLY